quality bathroom ceramics

MADISON

56CM ROUND BASIN WITH FULL PEDESTAL

- **COLOUR:** WHITE
- **MATERIAL:** VITREOUS CHINA
- **BASIN CODE:** FS13601A1D0000
- **WEIGHT:** 12,76KG
- **PEDESTAL CODE:** FS136110000000
- **WEIGHT:** 9,8KG
- **TAP HOLE:** 1 TAP HOLE

Lecico reserve the right to change the product without prior notification.

W: 560	H: 820	D: 378
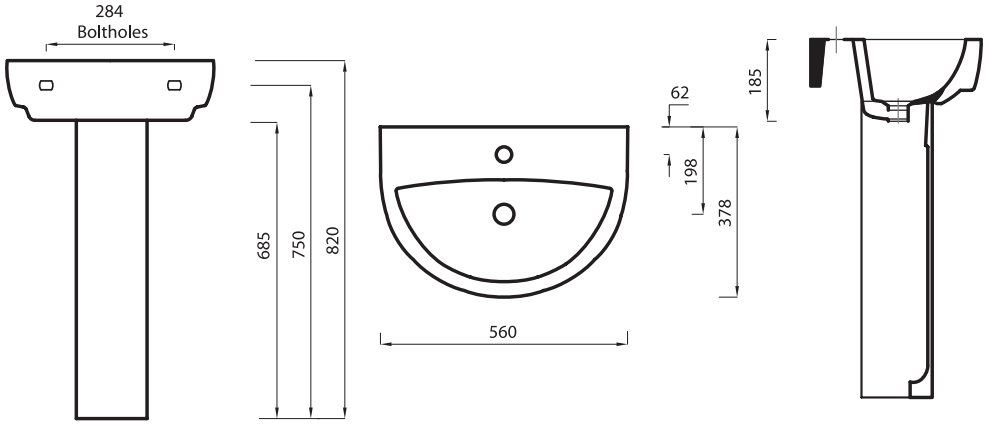
T: 021 531 9848 | info@lecicosa.co.za | www.lecicosa.co.za