quality bathroom ceramics

AVENSIS

WALL HUNG BIDET

- **COLOUR:** WHITE
- **MATERIAL:** VITREOUS CHINA
- **PAN CODE:** FS13M421100000
- **WEIGHT:** 19,13KG
- **TAP HOLE:** 1 TAP HOLE

Lecico reserve the right to change the product without prior notification.

W: 370	H: 525	D: 433
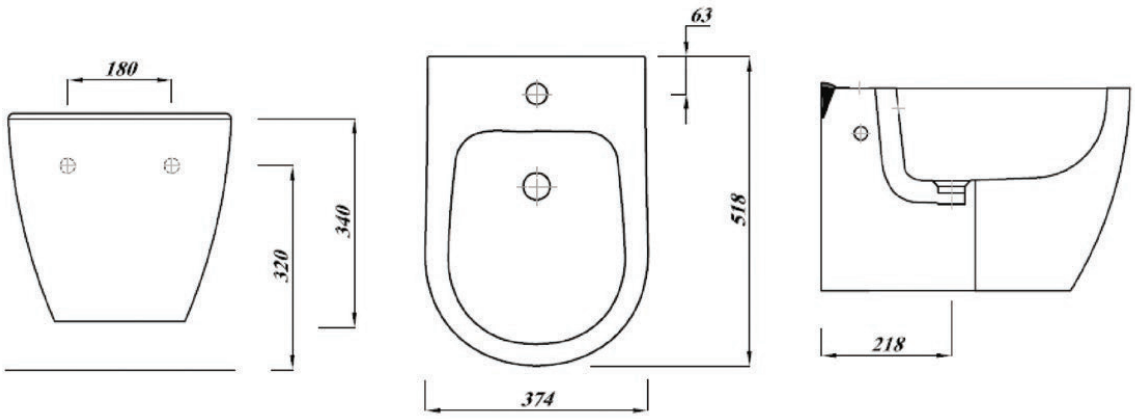
T: 021 531 9848 | info@lecicosa.co.za | www.lecicosa.co.za